Changes to UCR 2008, Change 1, Section 5.3.3, Network Infrastructure E2E Performance Requirements

SECTION	CORRECTION	EFFECTIVE DATE
5.3.3.2	"Voice" changed to "Assured Voice". "Non-Assured Voice" added.	Immediately
5.3.3.2	"Interactive VTC" changed to "Assured Interactive VTC". "Non-Assured Interactive VTC" added.	Immediately
Table 5.3.3-1	Entire table reworked and several DSCPs changed. Please review carefully.	Immediately
Table 5.3.3-2	Entire table reworked and several DSCPs changed. Please review carefully.	Immediately
5.3.3.3.3	Note added: Many routers have a separate non-configurable queue for network control traffic. If a router does not have the network control queue, the network control traffic would be processed in the EF queue. Note added: The definition of traffic engineering is found in Appendix A, Section A2, Glossary and Terminology Description.	Immediately
Table 5.3.3-3	Entire table reworked and several DSCPs changed. Please review carefully.	Immediately
5.3.3.9.1	Routine handset-to-handset minimum availability changed to 99.56, and added I/P (formerly C2) and FO/F (formerly C2 Special).	Immediately
Figure 5.3.3-14	The numbering and wording in this figure was reworked to reflect adjustments to the requirements. The graphics did not change. Please review carefully.	Immediately
5.3.3.9.1	**The following requirement changed: [Required]** The availability to include scheduled maintenance for the network infrastructure within a **Customer** Edge Segment, **which includes ASLAN and EBC** shall be 99.998 percent or greater for FO/F Users, 99.996 percent or greater for I/P users, and 99.8 percent or greater for other users. Note added: The availability calculations will be based on best practices because there appears to be no standardized model for calculating IP network availability.	Immediately
5.3.3.9.1 5.3.3.9.2 5.3.3.9.3	Organized 5.3.3.9 by creating sections 5.3.3.9.2 (Availability Design Factors), and 5.3.3.9.3 (Product Quality Factors). The new sections are filled with several requirements that were originally listed under section 5.3.3.9.1.	Immediately
5.3.3.12	Open Shortest Path First (OSPF) was added as an alternative to the IS-IS protocol.	Immediately

SECTION	CORRECTION	EFFECTIVE DATE
5.3.3.16	Probe requirement #9 changed: Only 2 NICs required instead of 4. One for OA&M and the other for test traffic. Probe requirement #19 changed: The server's default push/pull rate of 5 minutes was replaced with a configurable interval of 5-10 minutes.	Immediately

TABLE OF CONTENTS

SECTION **PAGE**

LIST OF FIGURES

FIGURE **PAGE**

LIST OF TABLES

TABLE **PAGE**

THIS PAGE INTENTIONALLY LEFT BLANK

5.3.3 Network Infrastructure End-to-End Performance Requirements

Section 5.3.3 contains E2E performance requirements for the network infrastructure that supports the IP-based VVoIP. The focus of this section is on the network performance aspects. The requirements for the various APL-approved products that make up the network infrastructure are provided in the respective sections of this document as follows:

1. The requirements for LAN products (i.e., LAN Core, Distribution, and Access switches) including LAN design guidance are provided in Section 5.3.1, Assured Services Local Area Network Infrastructure.

2. The requirements for the Network Infrastructure products (i.e., DISN Router, DISN Switch, and DISN Access Elements) are provided in Section 5.5, Network Infrastructure Product Requirements.

This section is written for converged networks, but does not address the effect of ranked voice on data and video services, which will be addressed in a subsequent revision of this document. The network infrastructure E2E performance requirements in this version are focused on voice applications. Later versions of this section will address video and data E2E performance requirements. Finally, this section addresses wired WANs, but does not address wireless WANs.

5.3.3.1 End-to-End Network Infrastructure Description

The E2E network infrastructure consists of three network segments. The network segments are the CE, Network Edge, and Core Segments. Figure 5.3.3-1, UC E2E VVoIP Network Infrastructure Segments and Measurement Reference Points, illustrates a high-level overview of the three-segment network infrastructure. The CE Segment is connected to the Core Segment by the Network Edge Segment. The description of each segment is provided in the following paragraphs.

5.3.3.1.1 CE Segment

The CE Segment may consist of a LAN, a CAN, or a MAN. The boundary of the CE Segment is the CE Router. The Network Edge Segment connects the CE Router to the AR via a DISN SDN. The CE Router is owned and maintained by the B/P/C/S. The CE Segment is considered robust and the LAN/CAN/MAN characteristics include high bandwidth, diversity, and redundancy. The CE Segment Quality of Service (QoS) is provided predominately by the use of robust bandwidth. The size of the LAN/CAN/MAN is dependent on its ability to meet the performance requirements defined in the UCR and the solution is internal to a Designated Approval Authority (DAA)-approved information assurance boundary. Design guidance and requirements for the LAN portion of the CE Segment are provided in Section 5.3.1, Assured Services Local Area Network Infrastructure.

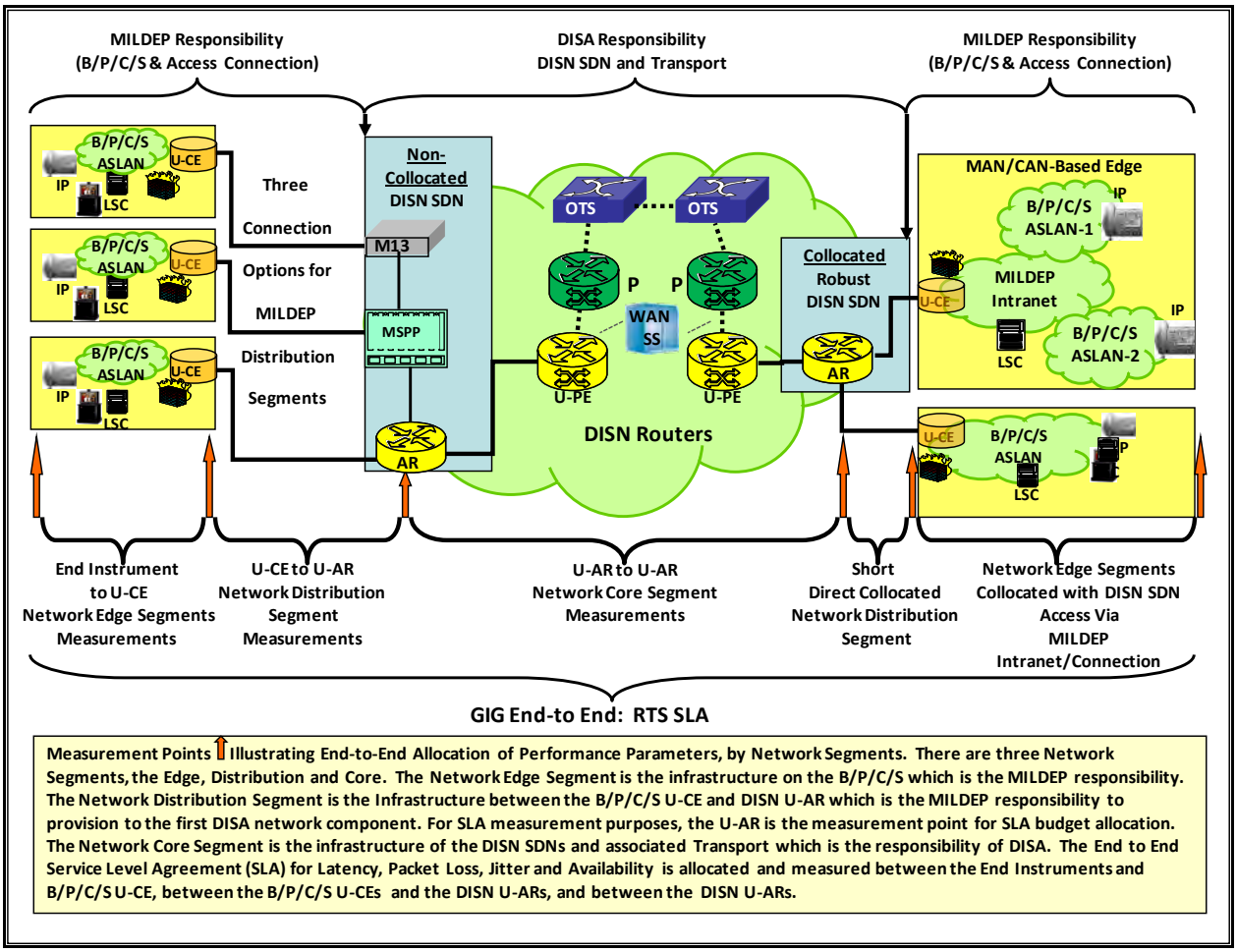

Figure 5.3.3-1. UC E2E VVoIP Network Infrastructure Segments and Measurement Reference Points

5.3.3.1.2 Network Edge Segment

The Network Edge Segment is measured between the following two demarcation points: the network side of the CE Router to the access port of the AR. Depending on the specific class of DISN SDN, the Network Edge Segment may consist of several configurations. The simplest configuration, which has an extremely low packet delay, is encountered when the CE Router and AR are collocated. In this case, the Network Edge Segment is a direct, short Ethernet (i.e., 100BT or 1000BT) connection between the CE Router and an AR. Figure 5.3.3-2, High-Level Illustration of E2E Network Segments, illustrates short-delay and longer-delay Network Edge Segment configurations.

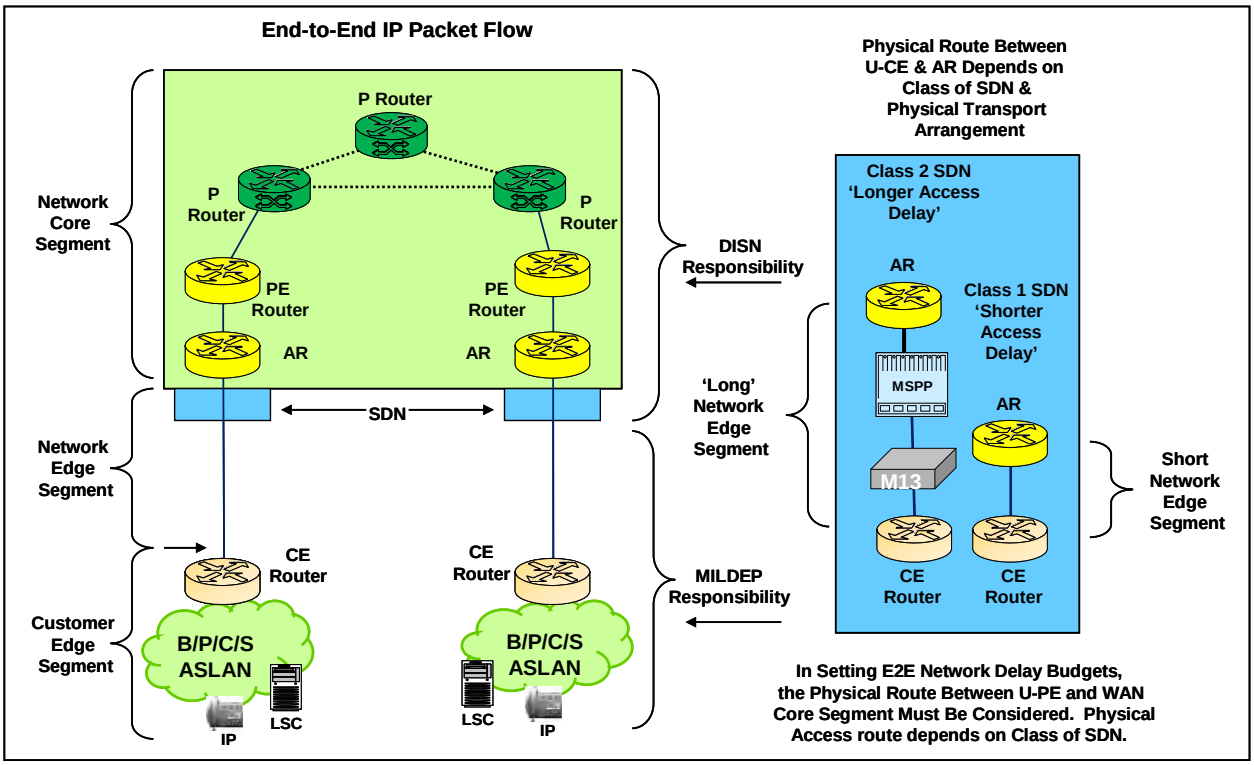

Figure 5.3.3-2. High-Level Illustration of E2E Network Segments

5.3.3.1.3 DISN Service Delivery Nodes

A DISN SDN is the access point where traffic to/from the CE Segment (or "customer") enters the DISN WAN via the Network Edge Segment. There are several classes of SDNs depending on whether the SDN has a M13, Multi-Service Provisioning Platform (MSPP), Provider (P), PE, and/or AR. The CE Segment CE Router connects to the SDN via the Network Edge Segment using one of three connection options as shown in Figure 5.3.3-2, High-Level Illustration of E2E Network Segments. Each connection option will introduce different transport delays between the CE Router and the AR depending on the physical connection string (data path) between the CE Router and the AR. DISA is responsible for the DISN SDN-to-SDN performance.

5.3.3.1.4 Network Core Segment

The Network Core Segment provides IP-based transport services over a high-speed network infrastructure and consists of the SDNs and the DISN Transport between the SDNs. The DISN Transport between the SDNs typically consists of a high-speed optical transport network that starts and terminates at the PE Router. The PE Routers are connected by a series of Provider Routers to form a reliable and robust IP core network. Typically, the ARs are subtended to the PE Router via a high-speed Ethernet connection. Figure 5.3.3-1, UC E2E VVoIP Network Infrastructure Segments and Measurement Reference Points, shows the different network segments. Due to the

different types of product deployments, the network infrastructure may be categorized according to whether it is deployed in a Deployable environment or in a Fixed environment. Since the performance of the network infrastructure is affected by the type of deployment, the network infrastructure is categorized as F-F, Fixed-to-Deployable (F-D), and Deployable-to-Deployable (D-D). Fixed-to-Fixed deployments are associated with F-F network infrastructure connections and are provided by terrestrial transport (wire line) connections serviced by the DISN. Fixed-to-Deployable deployments are associated with Deployable-to-Fixed connections where the Fixed point of presence is the Standardized Deployable Entry Point (STEP)/Teleport, Joint Network Node (JNN) Regional Hub, the Naval Computer and Telecommunications Area Master Station (NCTAMS), or some other Teleport. This section covers only the Fixed requirements unless specifically noted otherwise. Deployable-to-Deployable deployments are associated with D-D connections and may or may not transit a Fixed point of presence.

5.3.3.1.5 Expanded CE Segment: Communities of Interest Networks

Figure 5.3.3-1, UC E2E VVoIP Network Infrastructure Segments and Measurement Reference Points, addresses the use of MANs or CANs to create COINs or MILDEP Intranets. It must be noted that an entire MAN or CAN type of arrangement falls under the CE Segment of the E2E network infrastructure. Therefore, the requirements specified for the CE Segment apply to the entire MAN or CAN arrangement.

5.3.3.2 VVoIP Characteristics

The Inelastic Real-Time aggregate service class category is composed of granular service classes that support applications sensitive to delay. The Inelastic Real-Time aggregate service class is associated with applications that require low latency (also called One-Way IP Packet Transfer Delay (IPTD)), jitter (also called IP Packet Delay Variation (IPDV)), and packet loss (also called One-Way IP Packet Loss Ratio (IPLR)). The traffic sources in this aggregate service class category do not have the ability to reduce their transmission rate based on feedback received from the receiving end. Typically, applications in this service class are configured to negotiate the setup of a Real Time Protocol (RTP)/UDP session using some type of signaling (i.e., AS-SIP, H.323, H.248, and so on). When a user or end point has been authorized to start a new session, the admission procedure should verify that the newly admitted data rates are within the engineered capacity. The following granular service classes are classified as Inelastic/RTS:

- Assured Voice
- Non-Assured Voice
- Circuit Emulation
- Short Messages
- Assured Interactive VTC (i.e., DVS)
- Non-Assured Interactive VTC
- Command and Sensor Messages

5.3.3.3 General Network Requirements

The primary performance driver for voice products (i.e., SBU and voice components of DVS) used in the DISN is the E2E voice quality. The voice quality is calculated E2E from handset to handset. For voice applications, the measurement model for the EI is the E-Model as described in the Telecommunications Industry Association (TIA)/TSB-116-A, which is based on the International Telecommunications Union – Telecommunication Standardization Sector (ITU-T) Recommendation G.107. The E-Model uses an R-Factor rating that is correlated to the Mean Opinion Score (MOS) rating. The detailed EI voice quality calculation requirements are found in Section 5.3.2.19.2.1, Call Data.

The performance requirements specified in this section are network infrastructure related and include routers, asynchronous transfer mode (ATM) switches, MSPP, and optical interfaces to ensure that handset-to-handset requirements are achievable. The following assumptions were used in determining the performance requirements necessary to achieve acceptable service:

- IPv4
- Wireline Fixed Network (A=0)
- G.711 codec with 20 ms samples (Ie=0)
- Bearer packet size = 242 bytes
  - Calculated for SRTP-encrypted bearer packets
  - Includes SRTP Tag and Ethernet Interframe Gap
- Weighted Terminal Coupling Loss (TCLw) = 52 dB (in accordance with (IAW) ANSI/TIA-810-B)
- Latency due to EI (voice to IP and IP to voice) is 50 ms
  - Latency due to de-jitter buffer in EI is 20 ms
  - Includes Packet Loss Concealment delays

5.3.3.3.1 Compression

[Conditional] If the product supporting VVoIP uses compression, the compression approach shall be reversible.

NOTE: The preferred codec used for E2E F-F voice sessions is a G.711 Pulse-Code Modulation (PCM) (Uncompressed) with 20 ms samples. Other codecs are allowed and a minimum list of

codecs that must be supported by all EIs is found in Section 5.3.2, Assured Services Requirements.

5.3.3.3.2 Differentiated Services Code Point

[Required] The product shall support the plain text DSCP plan, as shown in Table 5.3.3-1, DSCP Assignments, and the DSCP assignment shall be software configurable for the full range (0-63) to support Deployable deployments that may not use the following DSCP plan.

Table 5.3.3-1. DSCP Assignments

AGGREGATED SERVICE CLASS	GRANULAR SERVICE CLASS	PRIORITY/ PRECEDENCE	DSCP BASE10	DSC BINARY	DSCP BASE8
Network Control	Network Signaling (OSPF, BGP, etc.)	N/A	48	110 000	60
Inelastic Real-Time	User Signaling (AS-SIP, H.323, etc.)	N/A	40	101 000	50
	Short Message	FO	32	100 000	40
	Assured Voice (Includes SRTCP)	FO	41	101 001	51
		F	43	101 011	53
		I	45	101 101	55
		P	47	101 111	57
		R	49	110 001	61
	Non-Assured Voice*	N/A	46	101 110	56
	Assured Multimedia Conferencing (voice, video, and data)	FO	33	100 001	41
		F	35	100 011	43
		I	37	100 101	45
		P	39	100 111	47
	(code points 34,36, and 38 are for Non-Assured Multimedia Conferencing)	R	51 [34,36,38]**	110 011	63
	Broadcast Video	N/A	24	011 000	30
Preferred Elastic	Multimedia Streaming	FO	25	011 001	31
		F	27	011 011	33
		I	29	011 101	35
		P	31	011 111	37
		R	26 [28,30]**	011 010	32
	Low-Latency Data: (IM, Chat, Presence)	FO	17	010 001	21
		F	19	010 011	23
		I	21	010 101	25
		P	23	010 111	27
		R	18 [20,22]**	010 010	22
	High Throughput Data	FO	9	001 001	11
		F	11	001 011	13
		I	13	001 101	15
		P	15	001 111	17
		R	10 [12,14]**	001 010	12
	OA&M	N/A	16	010 000	20
Elastic	Best Effort	N/A	0	000 000	00
	Low Priority Data	N/A	8	001 000	10

LEGEND:
AF Assured Forwarding
DSCP Differentiated Services Code Point
EF Expedited Forwarding
F FLASH
FO FLASH OVERRIDE
I INTERMEDIATE
IS-IS Intermediate System-Intermediate
OA&M Operations, Administration, and Maintenance
OSPF Open Shortest Path First
P PRIORITY
PHB Per Hop Behavior
R ROUTINE
SRTCP Secure Real-Time Transport Control Protocol
VTC Video Teleconferencing
* For a definition see Section A2 – Glossary
** Code points in brackets are reserved for non-conformance marking.

5.3.3.3.3 VVoIP Per-Hop Behavior Requirements

[Required] The system routers supporting VVoIP shall support the four- queue PHBs, as defined in Table 5.3.3-2, Four-Queue PHB Approach.

NOTE: This assumes that AR and CE Router PHB coordination occurs to prevent asymmetrical performance since the routers may be different on the ends of the connection. The LSC session budget must be less than or equal to the equivalent CE Router bandwidth budget. The CE Router bandwidth budget per queue must be less than or equal to the AR bandwidth budget per queue. For example, if the LSC session budget is 10 voice sessions, then the CE Router bandwidth budget for the EF queue must be greater than or equal to 1,100 kbps (10 x 110 kbps). In this scenario if the CE Router bandwidth budget was 1400 kbps to account for expected growth, surge, or other EF traffic, then the AR bandwidth must be greater than or equal to the CE Router bandwidth budget.

NOTE: For AF and EF PHBs, refer to Section 5.3.2.14.3, Per Hop Behavior Support.

Table 5.3.3-2. Four-Queue PHB Approach

GRANULAR SERVICE CLASS	PRIORITY/ PRECEDENCE	DSCP BASE10	QUEUE	PHB
Network Signaling (OSPF, IS-IS, and so on) (See note below table)	N/A	48	3	EF
User Signaling	N/A	40		
Short Message	FO	32		
Assured Voice	FO	41		
	F	43		
	I	45		
	P	47		
	R	49		
Assured Multimedia Conferencing	FO	33	2	AF41
	F	35		
	I	37		
	P	39		
	R	51		
Broadcast Video	N/A	24	1	AF31
Non-Assured Voice*	N/A	46		
Multimedia Streaming (code points 34, 36, and 38 are for Non-Assured Multimedia Conferencing) (The Non-Assured code points appear in Queue 1)	FO	25		
	F	27		
	I	29		
	P	31		
	R	26 [28,30,34,36, 38]**		
Low-Latency Data (IM, Chat, Presence)	FO	17		
	F	19		
	I	21		
	P	23		
	R	18 [20,22]**		
High Throughput Data	FO	9		AF32
	F	11		
	I	13		
	P	15		
	R	10 [12,14]**		
OA&M	N/A	16		
Default	N/A	0	0	Default
Low Priority	N/A	8		

LEGEND:

AF	Assured Forwarding
DSCP	Differentiated Services Code Point
EF	Expedited Forwarding
F	FLASH
FO	FLASH OVERRIDE
I	INTERMEDIATE
IS-IS	Intermediate System-Intermediate
OA&M	Operations, Administration, and Maintenance
OSPF	Open Shortest Path First
P	PRIORITY
PHB	Per Hop Behavior
R	ROUTINE
SRTCP	Secure Real-Time Transport Control Protocol
VTC	Video Teleconferencing

*For a definition see Section A2 – Glossary
** Code points in brackets are reserved for non-conformance marking.

NOTE: Many routers have a separate non-configurable queue for network control traffic. If a router does not have the network control queue, the network control traffic would be processed in the EF queue.

[Conditional] The system routers supporting VVoIP shall support the eight-queue PHBs as defined in Table 5.3.3-3, Eight-Queue PHB Approach.

NOTE: This assumes that AR and CE Router PHB coordination occurs to prevent asymmetrical performance since the routers may be different on the ends of the connection. The LSC call budget must be equal to the equivalent CE Router bandwidth budget. The CE Router bandwidth budget per queue must be equal to the AR bandwidth budget per queue. For example, if the LSC call budget is 10 calls, then the CE Router bandwidth budget for the EF queue must be equal to 1,100 kbps (10 * 110 kbps). In this scenario if the CE Router bandwidth budget was 1400 kbps to account for expected growth, surge, or other EF traffic, then the AR bandwidth must be equal to the CE Router bandwidth budget.

5.3.3.3.4 Traffic Conditioning Requirements

NOTE: The definition of traffic engineering is found in Appendix A, Section A2, Glossary and Terminology Description.

[Required] All CE Router and/or AR interfaces toward the CE Router shall support traffic conditioning on an aggregate granular service class basis on the input interface.

NOTE: The product shall calculate the bandwidth associated with traffic conditioning in accordance with RFC 3246, which requires that the queue size should account for the layer 3 header (i.e., IP header), but not the layer 2 headers (i.e., Point-to-Point Protocol (PPP), MAC, and so on) within a margin of error of 10 percent. When the other queues are not saturated, the Best Effort traffic may surge beyond its traffic-engineered limit.

[Required] The system routers shall be able to traffic condition using IP addresses, VLAN tags, protocol port numbers, and DSCPs as discriminators, as a minimum.

Table 5.3.3-3. Eight-Queue PHB Approach

GRANULAR SERVICE CLASS	PRIORITY/ PRECEDENCE	DSCP BASE10	QUEUE	CER PHB
Network Signaling (See note below table)	N/A	48	7	EF
User Signaling	N/A	40	6	
Short Message	FO	32		
Assured Voice	FO	41		
	F	43		
	I	45		
	P	47		
	R	49		
Assured Multimedia Conferencing	FO	33	5	AF41
	F	35		
	I	37		
	P	39		
	R	51		
Broadcast Video	N/A	24	4	AF31
Non-Assured Voice*	N/A	46		
Multimedia Streaming (code points 34, 36, and 38 are for Non-Assured Multimedia Conferencing) (The Non-Assured code points appear in Queue 4)	FO	25		
	F	27		
	I	29		
	P	31		
	R	26 [28,30,34,36,38]**		
Low-Latency Data (IM, Chat, Presence)	FO	17	3	AF21
	F	19		
	I	21		
	P	23		
	R	18 [20,22]**		
High Throughput Data	FO	9	2	AF12
	F	11		
	I	13		
	P	15		
	R	10 [12,14]**		
OA&M	N/A	16	1	AF11
Default	N/A	0	0	Default
Low Priority	N/A	8		

LEGEND:

AF	Assured Forwarding
DSCP	Differentiated Services Code Point
EF	Expedited Forwarding
F	FLASH
FO	FLASH OVERRIDE
I	INTERMEDIATE
IS-IS	Intermediate System-Intermediate
OA&M	Operations, Administration, and Maintenance
OSPF	Open Shortest Path First
P	PRIORITY
PHB	Per Hop Behavior
R	ROUTINE
SRTCP	Secure Real-Time Transport Control Protocol
VTC	Video Teleconferencing

* For a definition see Section A2 – Glossary
** Code points in brackets are reserved for non-conformance marking.

NOTE: Many routers have a separate non-configurable queue for network control traffic. If a router does not have the network control queue, the network control traffic would be processed in the EF queue.

[Required] All CE Routers and/or AR interfaces toward the CE Router shall support traffic conditioning on a granular service class basis on the output interface.

NOTE: The product shall calculate the bandwidth associated with traffic conditioning in accordance with RFC 3246, which requires that the queue size should account for the layer 3 header (i.e., IP header) but not the layer 2 headers (i.e., PPP, MAC, and so on) within a margin of error of 10 percent. When the other queues are not saturated, the Best Effort traffic may surge beyond its traffic-engineered limit.

5.3.3.4 VVoIP Latency

Latency is defined in Appendix A, Section A2, Glossary and Terminology Description, and the term is used interchangeably with the term IPTD. The one-way latency metric is reported as the arithmetic mean of several (specified) single measurements over a 5-minute period. Corrupt and lost packets are excluded from the calculation. The metric is reported to 1 ms accuracy, rounded up, with a minimum value of 1 ms.

[Required] All routers shall be capable of receiving, processing, and transmitting a voice packet within 2 ms or less in addition to the serialization delay for voice packets as measured from the input interface to output interface under congested conditions, as described in Section 5.3.1.4.1.1, ASLAN Voice Services Latency, to include all internal functions. For example, the serialization delay of a 100BT Interface is 0.017 ms, which would allow for a voice latency from input to Ethernet output under congested conditions of 2.017 ms.

NOTE: Internal functions do not include DNS lookups and other external actions or processes.

5.3.3.4.1 VVoIP E2E Latency

[Required] The E2E network infrastructure supporting VVoIP shall ensure that the one-way E2E latency (handset to handset) for F-F locations does not exceed 220 ms for VVoIP sessions as averaged over any 5-minute period. Figure 5.3.3-3, F-F E2E Latency, illustrates the measurement points for calculating the F-F E2E latency.

NOTE: The requirement for 220 ms is due to the limits of talk over. This latency may not be feasible for all scenarios (i.e., Southwest Asia (SWA)), but the requirement as stated is necessary to avoid talk over for the scenarios that are feasible.

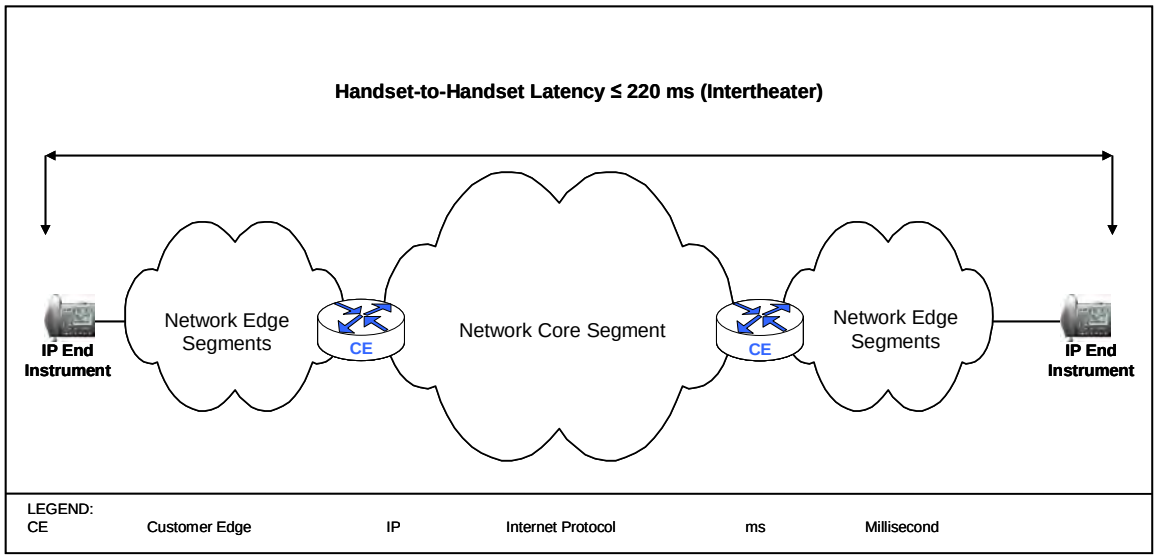

Figure 5.3.3-3. F-F E2E Latency

5.3.3.4.2 VVoIP CE Latency

[Required] The CE Segment supporting VVoIP shall ensure that the one-way latency from the IP handset to the CE Router within the CE Segment is less than or equal to 35 ms (or less than or equal to 44 ms if the CE Router is collocated with an AR) for VVoIP sessions as averaged over any5-minute period. Figure 5.3.3-4, CE Segment Outbound Latency, illustrates the delays associated with calculating the CE Segment outbound latency. The measurements shall include the latency associated with the CE Router switching.

[Required] The CE Segment supporting VVoIP shall ensure that the one-way latency from the CE Router to the IP handset within the CE Segment is less than or equal to 35 ms (or less than or equal to 44 ms if the CE Router is collocated with an AR) for VVoIP sessions as averaged over any 5-minute or period. Figure 5.3.3-5, CE Segment Inbound Latency, illustrates the delays associated with calculating the CE Segment inbound latency. The measurements shall include the latency associated with the CE Router switching.

NOTE: This assumes the latency associated with the de-jitter buffer is 20 ms.

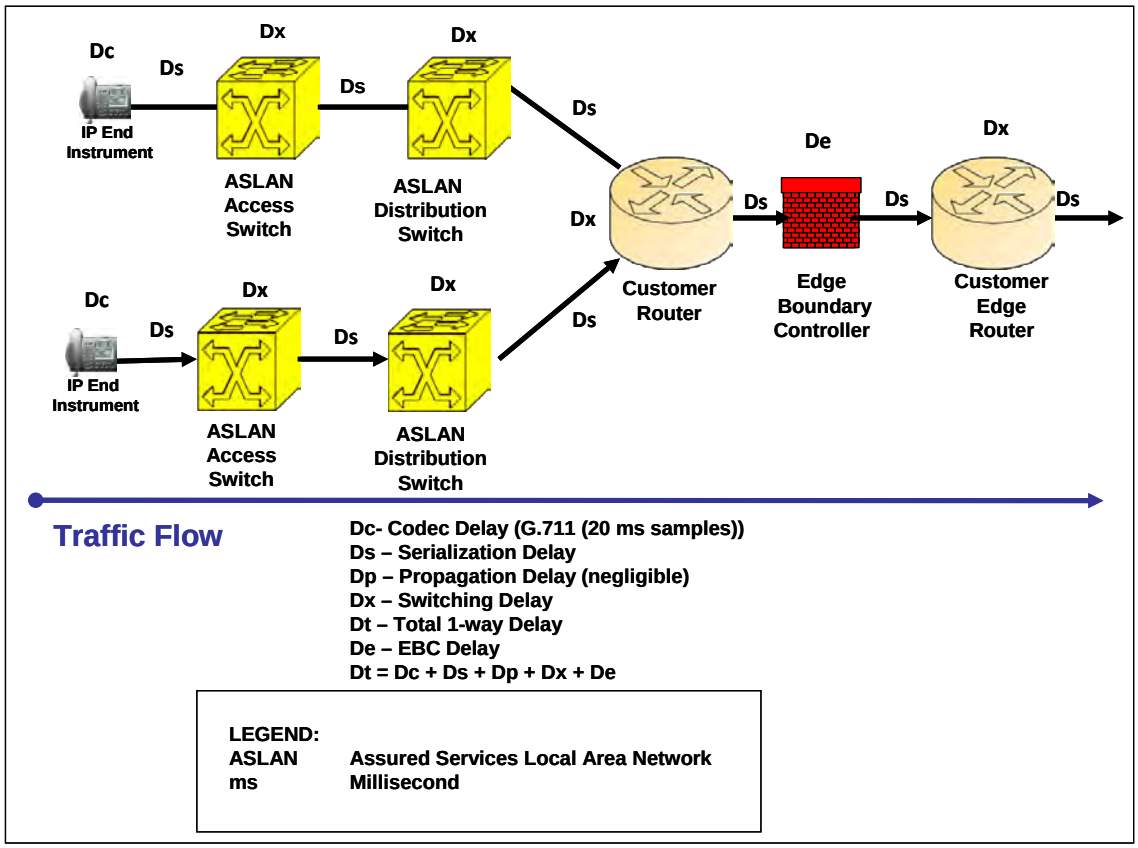

Figure 5.3.3-4. CE Segment Outbound Latency

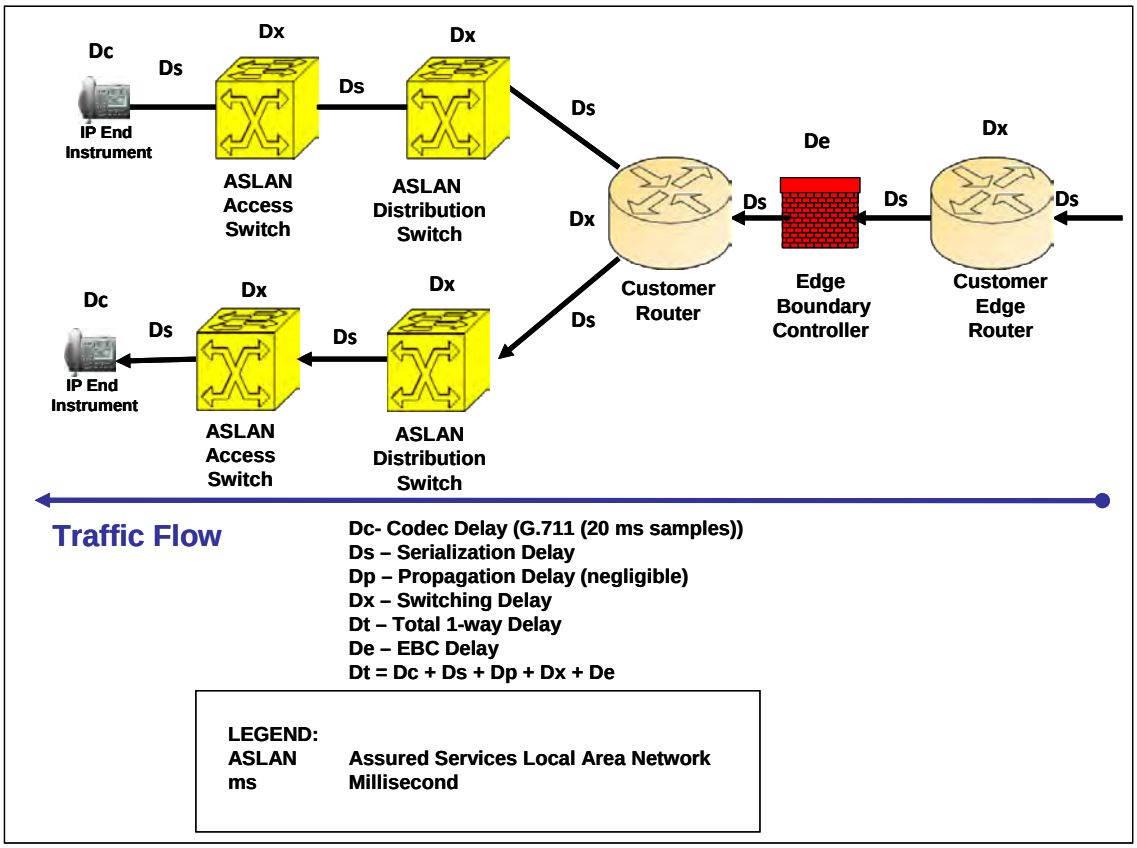

Figure 5.3.3-5. CE Segment Inbound Latency

5.3.3.4.3 VVoIP AR-to-AR Latency

[Required] The network infrastructure supporting VVoIP shall ensure that the one-way latency from the AR to the AR across the DISN WAN for F-F nodes does not exceed 130 ms for VVoIP sessions as averaged over any 5-minute period. Figure 5.3.3-6, F-F AR-to-AR Latency, illustrates the measurement points for calculating the F-F AR-to-AR latency. The measurements shall occur at the AR output ports to the CE Router to incorporate the switching delays through the AR.

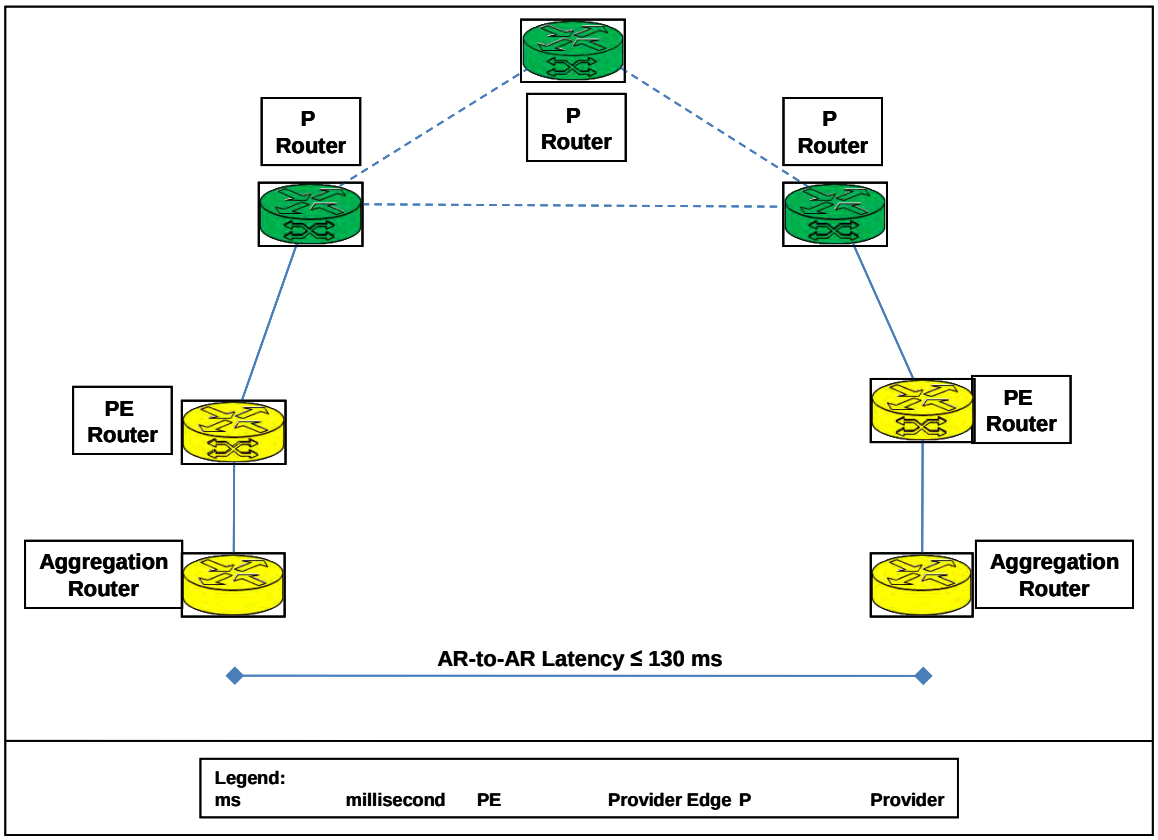

Figure 5.3.3-6. F-F AR-to-AR Latency

5.3.3.4.4 VVoIP CE Router-to-CE Router Latency

[Required] The DISN Network Infrastructure supporting VVoIP shall ensure that the one-way latency from the CE Router to the CE Router across the DISN Network Infrastructure for F-F nodes does not exceed 150 ms (or 132 ms if the CE Router is collocated with an AR) for VVoIP as averaged over any 5-minute period. Figure 5.3.3-7, F-F CE Router-to-CE Router Latency, illustrates the measurement points for calculating the F-F CE Router-to-CE Router latency. The measurements shall occur at the router output ports to the ARs because the CE Segment incorporates the switching delay through the CE Router.

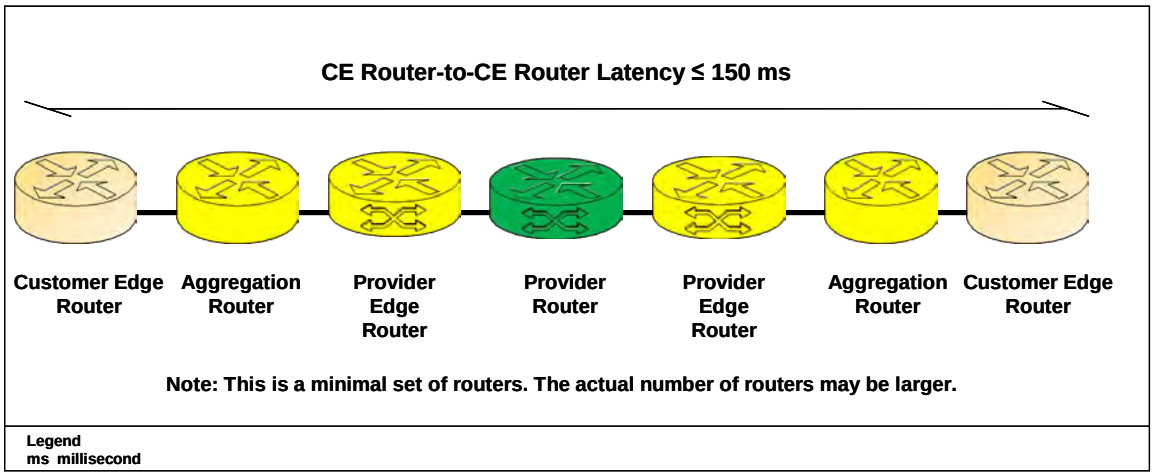

Figure 5.3.3-7. F-F CE Router-to-CE Router Latency

5.3.3.5 VVoIP Jitter

Jitter is defined in Appendix A, Section A2, Glossary and Terminology Description, and the term is used interchangeably with the term IPDV. The jitter numbers specified in this section are based on the minimum latency jitter model defined in ITU-T Recommendation Y.1540, November 2007. The one-way jitter is defined as the 99th percentile measurement of the distribution of singleton jitter (n) measurements over a 5-minute measurement interval.

5.3.3.5.1 VVoIP End-to-End Jitter

[Required] The E2E network infrastructure supporting VVoIP shall ensure that the E2E jitter (handset-to-handset) for F-F locations does not exceed 20 ms for VVoIP sessions during any 5-minute period. Figure 5.3.3-8, E2E F-F Jitter, illustrates the measurement points for calculating the F-F E2E network jitter.

NOTE: Dynamic de-jitter buffers are allowed, but for these performance measurements are assumed to be 20 ms.

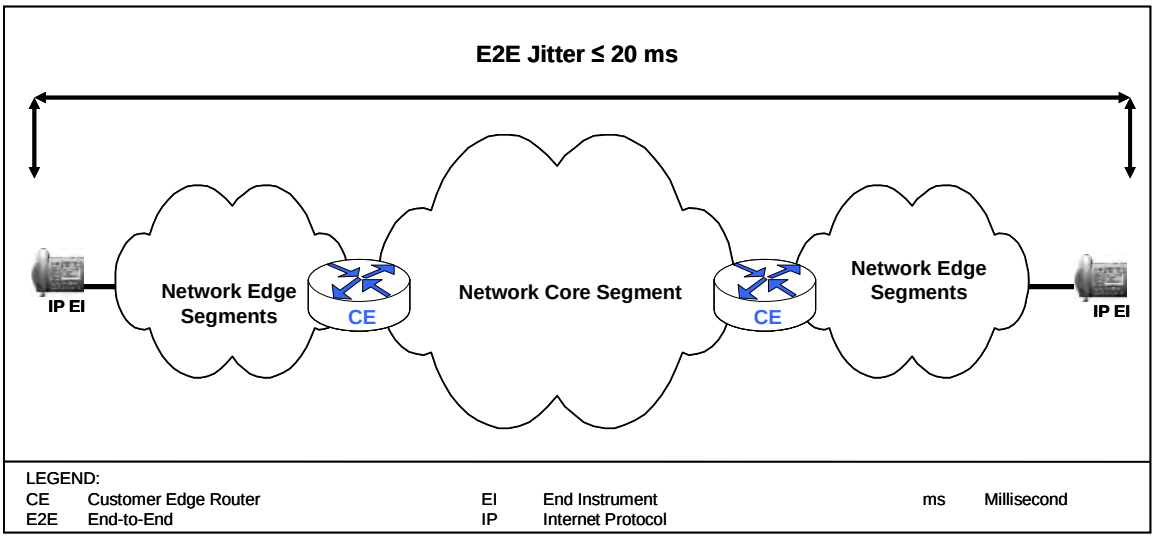

Figure 5.3.3-8. E2E F-F Jitter

5.3.3.5.2 VVoIP AR-to-AR Jitter

[Required] The network infrastructure from AR to AR supporting VVoIP shall ensure that the jitter for F-F nodes do not exceed 10 ms for VVoIP sessions during any 5-minute period. Figure 5.3.3-9, F-F AR-to-AR Jitter, illustrates the measurement points for calculating the F-F AR-to-AR jitter. The measurements shall occur at the AR output ports to the CE Router to incorporate the jitter through the AR.

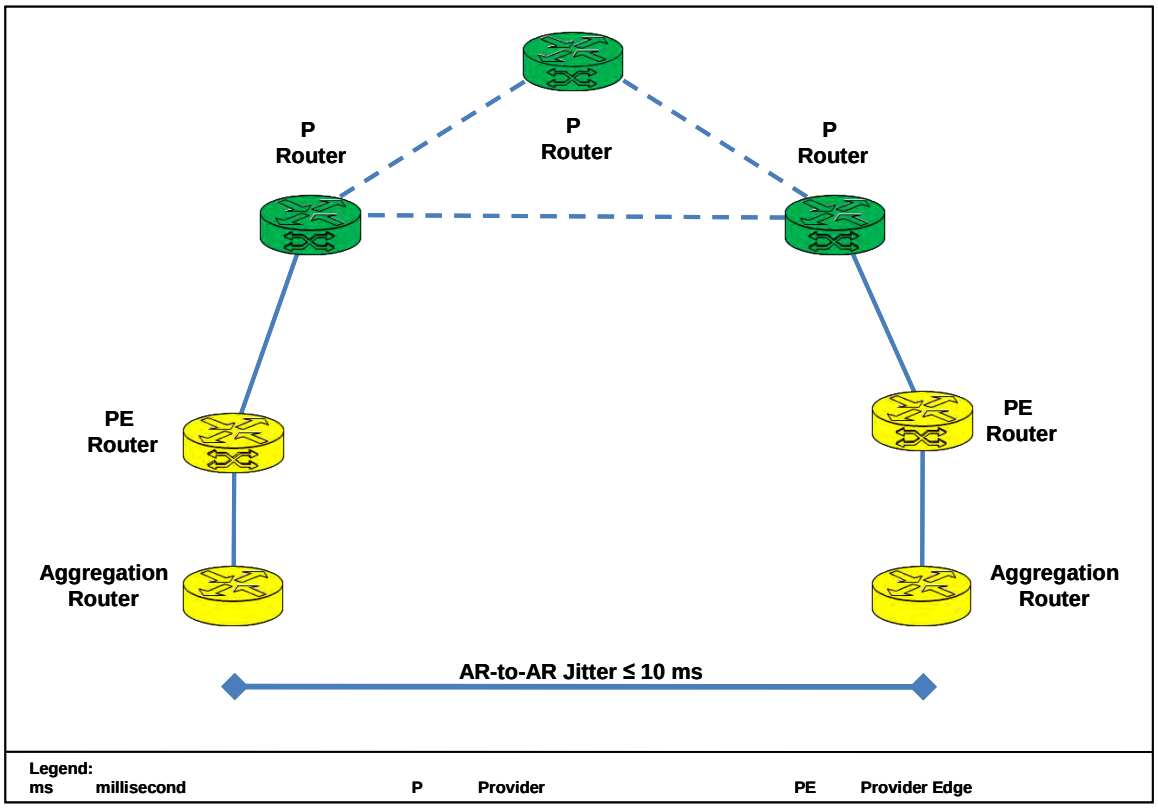

Figure 5.3.3-9. F-F AR-to-AR Jitter

5.3.3.5.3 VVoIP CE Router-to-CE Router Jitter

[Required] The DISN Network Infrastructure Product supporting VVoIP shall ensure that the one-way jitter from the CE Router to the CE Router across the DISN Network Infrastructure for F-F nodes does not exceed 14 (or 10 ms if the CE Router is collocated with the AR) for VVoIP sessions during any 5-minute period. Figure 5.3.3-10, F-F CE Router-to-CE Router Network Infrastructure Jitter, illustrates the measurement points for calculating the F-F CE Router-to-CE Router network infrastructure jitter. The measurements shall occur at the router output ports to the ARs because the CE Segment incorporates the jitter through the CE Router.

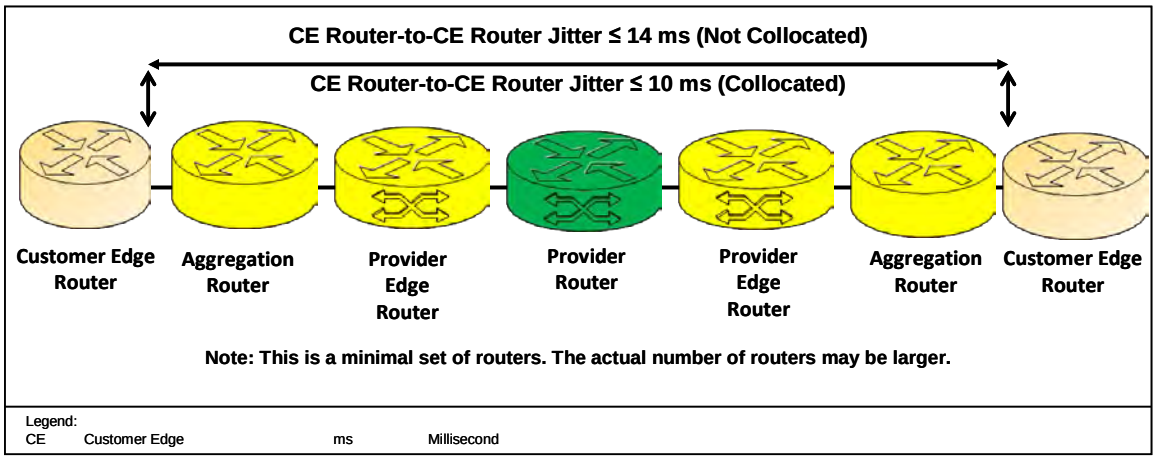

Figure 5.3.3-10. F-F CE Router-to-CE Router Network Infrastructure Jitter

5.3.3.5.4 VVoIP CE Jitter

[Required] The CE Segment supporting VVoIP shall ensure that the one-way jitter between the handset and CE Router within the Edge Segment does not exceed 3 ms (or 5 ms if the CE Router is collocated with an AR) for VVoIP sessions during any 5-minute period.

5.3.3.6 VVoIP Packet Loss

Packet loss is defined in Appendix A, Section A2, Glossary and Terminology Description, and the term is used interchangeably with the term IPLR. A single instance of packet loss measurement is defined as a record of the packet sent by the sender reference point at the destination reference point. The record is zero if the packet was received or one if the packet was not received. A packet is deemed to be lost if its one-way latency exceeds a time Tmax, where Tmax is equal to 3 seconds.

5.3.3.6.1 VVoIP E2E Packet Loss

[Required] The E2E network infrastructure supporting VVoIP shall ensure that the E2E IP packet loss (handset to handset) for F-F locations does not exceed 1.0 percent for VVoIP sessions as averaged over any 5-minute period. Figure 5.3.3-11, E2E F-F Packet Loss, illustrates the measurement points for calculating the F-F E2E packet loss.

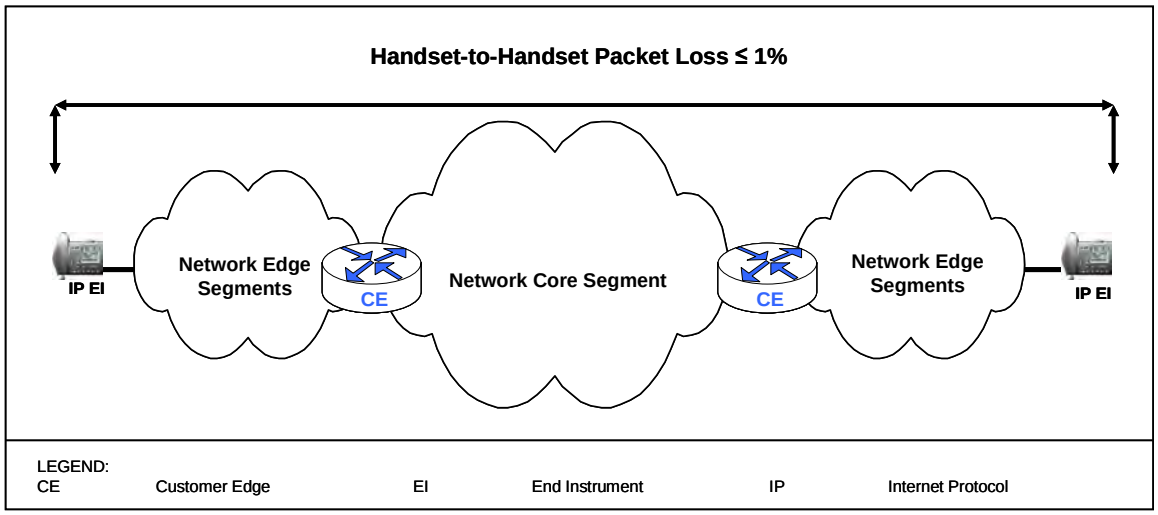

Figure 5.3.3-11. E2E F-F Packet Loss

[Required] To ensure the previous requirement is met, the E2E network infrastructure supporting VVoIP shall be designed and engineered for a one-way E2E packet loss for F-F locations of 0 percent for VVoIP sessions as averaged over any 5-minute period.

5.3.3.6.2 VVoIP AR-to-AR Packet Loss

[Required] The network infrastructure from AR-to-AR supporting VVoIP shall ensure that the packet loss for F-F nodes does not exceed 0.3 percent for VVoIP sessions) as averaged over any 5-minute period. Figure 5.3.3-12, F-F AR-to-AR Packet Loss, illustrates the measurement points for calculating the F-F AR-to-AR packet loss. The measurements shall occur at the AR output ports to the CE Router to incorporate the packet loss through the AR.

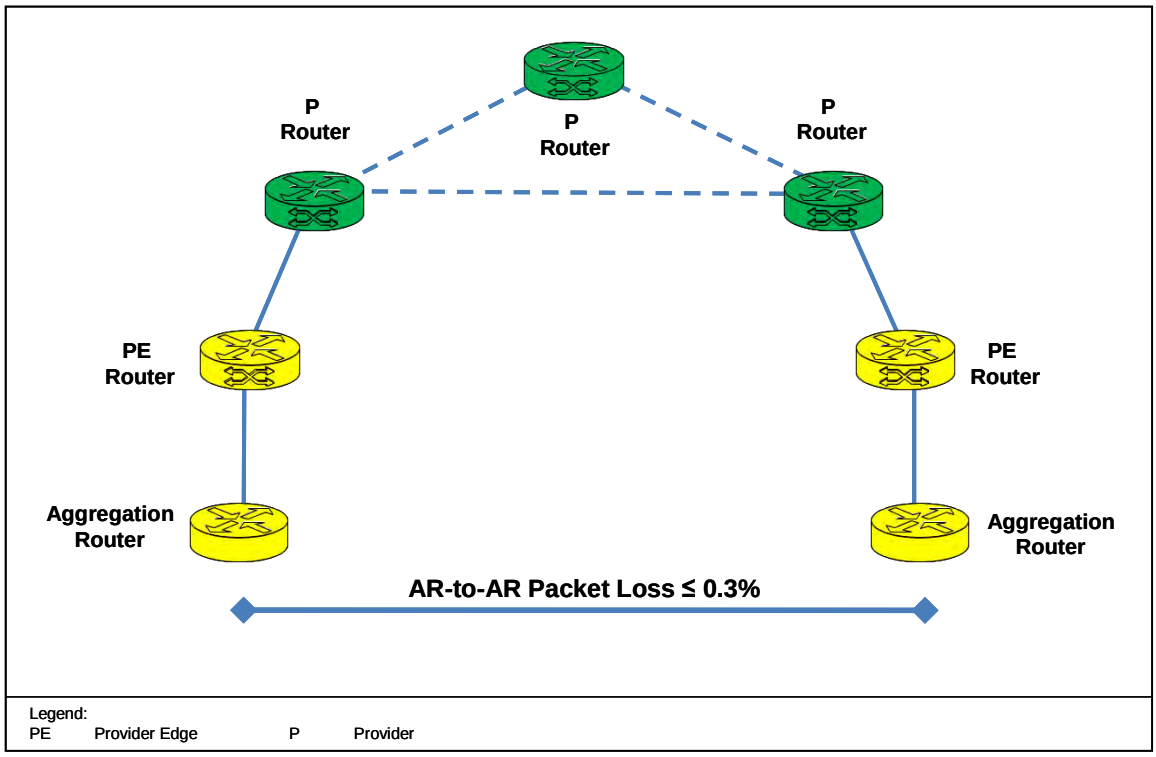

Figure 5.3.3-12. F-F AR-to-AR Packet Loss

5.3.3.6.3 VVoIP CE Router-to-CE Router Packet Loss

[Required] The DISN Network Infrastructure supporting VVoIP shall ensure that the one-way packet loss from the CE Router to the CE Router across the DISN Network Infrastructure for F-F nodes does not exceed 0.8 percent (or 0.3 percent if the CE Routers are collocated with the ARs) for VVoIP sessions as averaged over any 5-minute period. Figure 5.3.3-13, F-F CE Router-to-CE Router Network Infrastructure Packet Loss, illustrates the measurement points for calculating the F-F CE Router-to-CE Router packet loss. The measurements shall occur at the router output ports to the ARs because the CE Segment incorporates the packet loss through the CE Router.

NOTE: This assumes the packet loss between a collocated CE Router and AR is 0.01 percent or less.

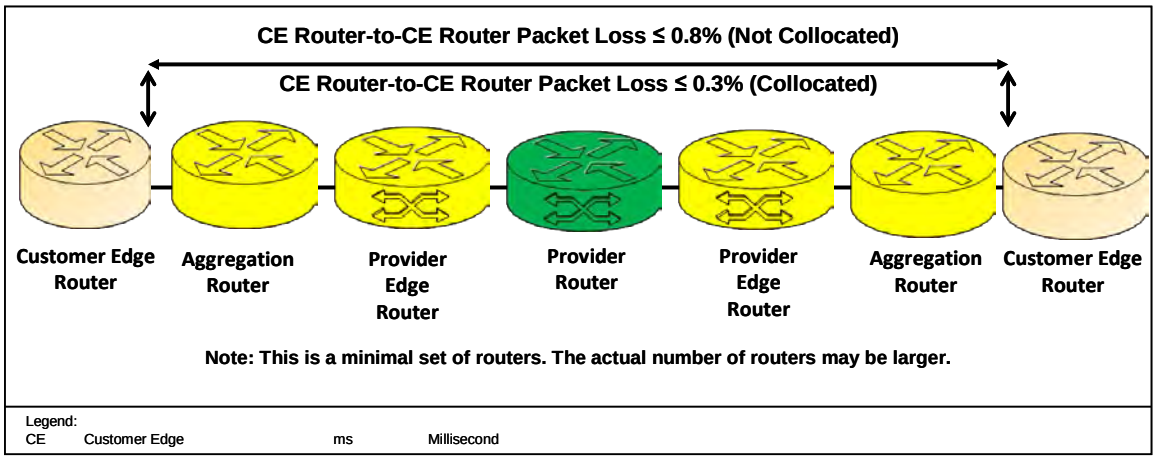

Figure 5.3.3-13. F-F CE Router-to-CE Router Network Infrastructure Packet Loss

5.3.3.6.4 VVoIP CE Packet Loss

[Required] The CE Segment supporting VVoIP shall ensure that the one-way packet loss between the handset and CE Router does not exceed 0.05 percent for VVoIP sessions as averaged over any 5-minute period.

5.3.3.7 Internet Protocol Version 6

[Required] The network infrastructure products supporting VVoIP shall accept, route, and process IPv6 protocol traffic while providing parity to IPv4.

NOTE: The goal of this requirement is to permit applications and data owners to complete operational transition to IPv6 with at least the same functionality as currently found in IPv4.

NOTE: The IPv6 requirements are found in Section 5.3.5, IPv6 Requirements.

It is assumed that:

1. The serialization and switching delay increases associated with larger IPv6 packets in comparison to IPv4 packets is insignificant.

2. The latency calculations are the same for IPv4 and IPv6 implementations.

3. Any improvements in the router processing speed due to the simplified IPv6 header will be ignored.

5.3.3.8 VVoIP Network Infrastructure Network Management

The VVoIP Network Infrastructure NM requirements are found in Section 5.3.2.17, Management of Network Appliances.

5.3.3.9 System-Level Quality Factors

5.3.3.9.1 End-to-End Availability

The definition of availability, found in the Telcordia Technologies GR-512-CORE, Section 12, is the basis for the E2E VVoIP network reliability. The following paragraphs outline the availability requirements for the VVoIP network.

Figure 5.3.3-14, F-F Network Infrastructure Availability, illustrates the measurement points for calculating the F-F network availability.

[Required] The availability for the handset-to-handset network infrastructure between F-F locations serving VVoIP users with ROUTINE precedence shall be 99.56 percent or greater; for I/P users, 99.95 percent and FO/F users 99.96 percent or greater to include scheduled maintenance.

[Required] The availability for the network infrastructure within the F-F from AR to AR shall be 99.998 percent or greater to include scheduled maintenance.

[Required] The availability for the Network infrastructure within the F-F from CE Router to CE Router shall be 99.96 percent or greater to include scheduled maintenance.

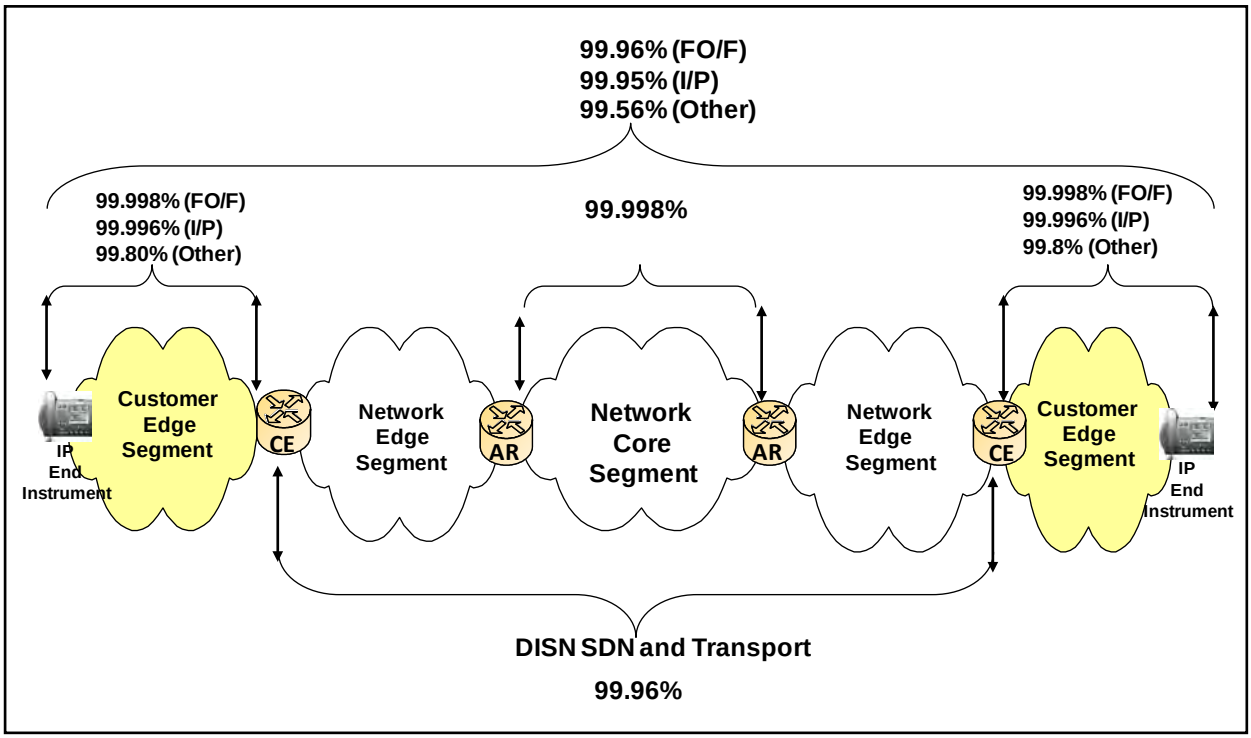

Figure 5.3.3-14. F-F Network Infrastructure Availability

[Required] The availability to include scheduled maintenance for the network infrastructure within a Customer Edge Segment, which includes ASLAN and EBC shall be 99.998 percent or greater for FO/F users, 99.996 percent or greater for I/P users, and 99.8 percent or greater for other users.

NOTE: The availability calculations will be based on best practices because there appears to be no standardized model for calculating IP network availability.

5.3.3.9.2 Availability Design Factors

[Required] The E2E network infrastructure supporting VVoIP users with precedence above ROUTINE shall have no single point of failure to include power sources and NM.

[Required] The National Military Command Center (and Alternate), combatant commanders, or Component headquarters shall not be isolated longer than 30 minutes because of an outage in the Core Segment of the network.

[Required] In the event of an E2E network infrastructure component failure in a network supporting VVoIP users with precedence above ROUTINE, all sessions that are active shall not be disrupted (i.e., loss of existing connection requiring redialing) and a path through the network shall be restored within 5 seconds.

[Required] If the Edge Segment has at least two separate access connections, then the VVoIP traffic shall only use one access connection at a time to prevent asymmetric routing.

NOTE: Data traffic may use the alternate connection.

[Required] No segment of the E2E network infrastructure shall use split cost metric routing for VVoIP traffic.

NOTE: Split cost metric routing is a technique used to provide survivability by sending packets associated with a session across multiple paths through the network infrastructure. This technique often introduces unacceptable jitter.

[Required] All network infrastructure products supporting VVoIP users with precedence above ROUTINE shall have 8 hours of backup power.

NOTE: This requirement does not address ASLAN backup power requirements, which are addressed in Section 5.3.1, ASLAN Infrastructure Product Requirements.

[Conditional] If the Edge Segment supports users with precedence above ROUTINE, then the Edge Segment shall have two separate access connections that shall be provisioned on physically diverse paths via two different ARs. Dual homing is physically or logically diverse in accordance with the DISN subscription rates.

[Conditional] If the Edge Segment has at least two separate access connections and supports users with precedence above ROUTINE, then each connection will be traffic engineered to support 100 percent, which includes the 25 percent surge requirement of the VVoIP traffic load.

[Conditional] If the Edge Segment supports users with precedence above ROUTINE and the CE Router is collocated with an SDN containing a robust MSPP, then a separate access connection to another robust SDN shall be used for redundancy.

5.3.3.9.3 Product Quality Factors

[Required] End-to-end network infrastructure products supporting VVoIP users with precedence above ROUTINE shall support a protocol that allows for dynamic rerouting of IP packets to eliminate any single points of failure in the network.

[Required] All network infrastructure products supporting VVoIP users with precedence above ROUTINE used to meet the reliability requirements shall be capable of handling the entire session processing load in the event that its counterpart product fails.

[Required] All network infrastructure products supporting VVoIP that implement Multiprotocol Label Switching (MPLS) shall have a Fast Re-Route (FRR) capability that restores paths around a local failure (i.e., a failure involving a single router or circuit) within 50 ms.

[Required] Network infrastructure routers shall only enact switchovers based on a reduction in access network throughput or bandwidth with NM troubleshooting procedures, because the routers cannot determine where or what in the access IP connection is the cause of the reduction.

[Conditional] If the network infrastructure supports users with precedence above ROUTINE, then the network infrastructure routers shall provide an availability of 99.999 percent to include scheduled maintenance.

NOTE: The availability calculations will be based on best practices because there appears to be no standardized model for calculating router availability. In addition, the network infrastructure router availability requirements may be met through the use of dual homing and other routing techniques, or the use of high-availability routers (e.g., 99.999 routers).

[Conditional] If the Edge Segment has at least two separate access connections and the CE Router detects an access connection failure, the CE Router shall switch to the alternate or backup access connection.

NOTE: The detection of the access connection failure may occur either by a T1 or SONET level alarm (level 2), or by a loss of router HELLO status messages (level 3).

[Conditional] If the CE Router has at least two separate access connections (i.e., dual homed) and detects an access connection failure, the CE Router shall switch to the alternate or backup access connection using an automatic process and shall not require operator actions.

NOTE: When the switchover occurs, VVoIP sessions in progress may be lost, and new sessions may not be able to be established until the IP routing updates have taken place. This may take 10 seconds or more and is dependent on the routing protocol standard update interval.

[Conditional] If the Edge Segment has at least two access connections to provide redundancy, then the network administrators shall switch VVoIP traffic between access connections at least weekly to verify that the alternate circuit or path is working properly.

5.3.3.10 Design and Construction

5.3.3.10.1 Materials

5.3.3.10.1.1 Layer 1 – Physical Layer

[Required] All F-F network infrastructure network connections supporting VVoIP shall have a bandwidth of T1 (1.544 Mbps) or greater.

5.3.3.10.1.2 Layer 2 – Data Link Layer

[Required] The E2E network infrastructure (excluding session originators) supporting VVoIP sessions shall use the media default Maximum Transmission Unit (MTU). The media default MTU for Ethernet is 1500 bytes.

[Required] The E2E network infrastructure supporting VVoIP sessions shall permit packet fragmentation.

NOTE: Packet fragmentation allows packets to be fragmented, instead of discarded, if the path MTU is less than the MTU size of the packet transiting the path. This requirement is associated primarily with signaling and NM packets, because the bearer packets are smaller than the MTU.

[Conditional] If the unclassified Edge System product supporting VVoIP uses an Ethernet interface for connecting to the LAN, then its NIC MTU size shall be set to 1400 bytes. The use of the MTU as specified will allow for overhead associated with encryptors or virtual private networks (VPNs) without causing packet fragmentation.

[Conditional] If the classified Edge System product supporting VVoIP uses an Ethernet interface for connecting to the LAN, then its NIC MTU size shall be set to 1280 bytes. The use of the MTU as specified will allow for overhead associated with encryptors or VPNs without causing packet fragmentation.

[Required] All E2E network infrastructure network connections consisting of Ethernet connections that support VVoIP shall be switched full-duplex connections.

[Required] All E2E network infrastructure product Ethernet interfaces shall support auto-negotiation as described in the IEEE 802.3 series of standards.

[Required] All E2E network system network links consisting of Ethernet connections that support VVoIP shall not exceed IEEE recommended distances for Ethernet cabling as shown in Table 5.3.3-4, IEEE Recommended Distances for Ethernet Cabling.

NOTE: The use of repeaters may extend the distances.

Table 5.3.3-4. IEEE Recommended Distances for Ethernet Cabling

	10BASE-T ETHERNET	**100BASE-T FAST ETHERNET**	**1000BASE-T GIGABIT ETHERNET**
CAT5, 6 UTP, CAT5e	330 ft 100 m	330 ft 100 m	330 ft 100 m
Multi-mode Fiber	6600 ft 2 km	6600 ft 2 km	1830 ft 550 m
Single-mode Fiber	15 mi 25 km	12 mi 20 km	3 mi 5 km
NOTE: All distances are for full-duplex communications. In addition, it is understood that 10GBASE-T is an acceptable alternative, but the variety of cabling and distances are beyond the scope of this table.			
LEGEND: Base Baseband km Kilometer mi Mile CAT Category m Meter UTP Unshielded Twisted Pair ft Foot			

5.3.3.11 Provisioning

The bandwidth required per supported voice session on the Ethernet network infrastructure is 220 kbps (110 kbps each direction). This is based on G.711 (20 ms) with IP overhead (105 kbps) associated with the Ethernet Interframe Gap and the use of SRTP to secure the voice bearer. In addition, it includes the overhead associated with the Secure Real-Time Transport Control Protocol (SRTCP) (5 kbps), which is used for providing voice performance statistics for the voice bearer. Since no assumption can be made about whether the traffic is IPv4 or IPv6, the scenario resulting in the higher bandwidth is used (IPv6).

[Required] The E2E Network Infrastructure supporting VVoIP shall assume the use of G.711 (20 ms) for calculating bandwidth budgets within the fixed network even if compressed codecs are used. For example, if G.729 is used for an F-T VVoIP session, then the budget for the fixed portion of the network will still allocate 110 kbps to that session even though the session uses less bandwidth.

[Required] The Access connections supporting VVoIP shall be engineered to support one WAN (trunk) voice session (110 kbps of IP bandwidth in each direction) for every four EIs within the Edge Segment (NOTE: The 4/1 ratio does not include surge) or shall be traffic engineered in accordance with the following approach:

1. Determine the busy hour traffic load in Erlangs from current traffic pattern, matrix, or call volume using the following formula and use the Erlang B table to determine the number of connections/size of connection required to support the traffic load.

Busy Hour Offered Load	=	Total Call Time for the Busy Hour in Seconds/10 (averaged over the 10 busiest hours of the year)
Busy Hour Erlang	=	Busy Hour Offered Load in Seconds/3600

2. Calculate the Access Connection bandwidth requirement based on the following assumptions:

Assumptions:

Call Arrival Distribution	=	Poisson
Codec Type	=	G.711 (coding rate: 64000 bits/sec)
Frame size	=	20 ms interval time (0.020 sec)
Samples/Packet	=	80 samples per packet
Frames/Packet	=	1
Frames/Second	=	50
Frame Size/Packet	=	160 bytes
Ethernet Interframe Gap	=	12 bytes
SRTP Authentication Tag	=	4 bytes
Frames/Erlang	=	50
Packets/Second/Erlang	=	50
Packet Size (for Ethernet)	=	262 bytes (assumes IPv6)
Access Bandwidth Formula	=	Busy Hour Erlang B * Packet Size * Packets/Second/Erlang B* 8 bits/byte

For example, if the Busy Hour Erlang B equals 25, then the access bandwidth should be 25*262*50*8 = 2,620,000 bits per second (bps) or 2.6 Mbps.

[Required] A B/P/C/S shall not reduce the number of simultaneous Access Connection (trunk) subscriptions to the DISN when they migrate from TDM to IP unless traffic engineering is completed in accordance with the preceding requirement.

NOTE: For instance, if the existing B/P/C/S subscribed for 100 simultaneous DS0s to the DISN with their TDM architecture, but the engineered IP solution only requires 90 multiplied by (*) 110 kbps of bandwidth, then the B/P/C/S design must support 100 multiplied by (*) 110 kbps of bandwidth to meet this requirement.

[Required] The E2E Network Infrastructure design shall provide, at a minimum, a 25 percent increase in network capacity (i.e., throughput and number of sessions) above the current employed network capacity at all tandem switches, MFSs, MFSSs, and critical dual-homed EO switches and LSCs.

[Required] The long-haul portion of the network infrastructure shall be able to support a regional crisis in one theater, yet retain the surge capability to respond to a regional crisis occurring nearly simultaneously in another theater.

5.3.3.12 Interchangeability

[Required] All Edge System routers supporting VVoIP shall support, as a minimum, the following routing protocols and methods:

1. Static Routing. Static routing is a manual method for determining the path that traffic should take upon egress from a router. It is one method for interfacing between the CE Router and the AR, and typically is associated with single-homed Edge Segments.

2. BGP-4. The BGP-4 is a protocol for exchanging routing information between gateway hosts (each with its own router) in a network of autonomous systems and is described in RFCs 4271 and 1772. It is a second method for interfacing between the CE Router and the AR and typically is associated with dual-homed Edge Segments.

3. Intermediate System-to-Intermediate System Protocol (IS-IS). The IS-IS is an OSI protocol by which intermediate systems exchange routing information. This protocol is not intended to be used as the protocol to interface to the ARs.

   OR

   OSPF. The OSPF is an interior gateway protocol used to route IP packets within a routing domain. The OSPF version 2 for IPv4 is described in RFC 2328. Updates to OSPF for IPv6 are described in RFC 5340.

NOTE: The IPv6 requirements for BGP-4 are specified in Section 5.3.5, IPv6 Requirements.

5.3.3.13 Voice Grade of Service

The GOS is defined in Appendix A, Section A2, Glossary and Terminology Description. In addition, the voice and video (VVoIP only) GOS are calculated independently since the budgets associated with each are independent.

[Required] The E2E network infrastructure shall provide a GOS of P.00 (i.e., zero sessions out of 100 will be “blocked” during the “busy hour”) for FLASH and FLASH OVERRIDE voice and video (VVoIP only) sessions. This is also referred to as nonblocking service.

[Required] The E2E network infrastructure shall provide a GOS of P.02 (i.e., two sessions out of 100 will be blocked during the busy hour) and P.01, respectively, during a 100 percent increase above normal precedence usage for PRIORITY and IMMEDIATE voice and video (VVoIP only) sessions at a minimum.

[Required] The E2E network infrastructure supporting VVoIP shall provide a peacetime theater GOS of P.07 (i.e., seven voice sessions out of 100 will be blocked during the busy hour) or better, and an intertheater GOS of P.09 or better, as measured during normal business hours of the theaters for ROUTINE precedence voice and video (VVoIP only) sessions traversing the network from an EO or LSC EI and/or GEI.

[Required] The CE Segment supporting VVoIP shall provide a GOS between the EO and any PBX users or between an LSC and its subtended LSC that do not exceed an additional blockage of P.02 for voice or video (VVoIP video only) sessions.

5.3.3.14 VVoIP Network Infrastructure Survivability

The following requirements contribute to the survivability of the VVoIP system:

[Required] No more than 15 percent of the B/P/C/Ss shall be affected by an outage in the network.

5.3.3.15 Voice Service Quality

[Required] Because intelligibility of voice communications is critical to C2, the voice service quality rating, on at least 95 percent of the voice sessions, will have a MOS in accordance with the following scenarios:

- Fixed to Fixed – 4.0
- Fixed to Deployable – 3.6
- Deployable to Deployable – 3.2

[Required] The method used for obtaining the MOS shall be in accordance with the DoD Information Technology Standards Registry (DISR).

NOTE: The current method used is the E-Model for F-F scenarios and P.862 for Deployable scenarios.

5.3.3.16 Performance Quality Monitoring and Measurement

To measure and monitor the quality of the voice service, the MILDEP will need to acquire a performance measurement tool (PMT). The architecture associated with the E2E NM and

monitoring of the quality of the voice service is described in Section 5.3.2.17, Management of Network Appliances. The requirements for the PMT are defined as follows:

1. **[Required: PMT]** The product shall convert network metrics to R-Factor-derived MOS based on ITU G.107 E-model for IP voice for use between Fixed Edge sites.

2. **[Required: PMT]** The product shall convert network metrics to a MOS factor based on the ITU-T Recommendation P.862, Perceptual Evaluation of Speech Quality (PESQ) for IP voice between Deployable Edge sites, or Fixed and Deployable Edge sites.

3. **[Required: PMT]** The product shall convert network metrics for IP video performance to the quality metric described in ITU G.1070.

4. **[Required: PMT]** The product shall provide network metrics for data performance for HyperText Transfer Protocol (HTTP) and TCP applications to include latency, packet loss, and jitter in accordance with the standards for latency, packet loss, and jitter referenced in this section.

5. **[Required: PMT]** The product shall report substandard IP-voice and IP-video performance via SNMP Version 3 (SNMPv3) traps on a probe-to-probe basis based on a configurable threshold.

6. **[Required: PMT]** The product shall integrate with the existing DISN Operational Support System (OSS).

7. **[Required: PMT]** The product shall comply with the applicable STIGs and Checklists.

8. **[Required: PMT]** The product shall employ a probe to measure E2E performance.

9. **[Required: PMT]** The system probe shall support a minimum of two 10/100/1000-Mbps Ethernet Network Interface Cards (NICs): One for OA&M and the other for test traffic.

10. **[Required: PMT]** The product components (i.e., probe, database, performance measurement application, and data server) shall support remote and local configuration.

11. **[Required: PMT]** The product components (i.e., probe, database, performance measurement application, and data server) shall retain the last settings in the absence of power.

12. **[Required: PMT]** The system probe either shall push or pull data to a data collection server.

13. **[Required: PMT]** The system probe shall generate voice over IP (G.711 - 20 ms) test sessions.

14. **[Required: PMT]** The system probe shall generate Video over IP (H.263 384 kbps, 30 Frames per Second fps) test sessions.

15. **[Required: PMT]** The system probe shall generate HTTP and TCP test sessions.

16. **[Required: PMT]** The system probes shall be capable of marking active test streams with user-configurable DSCP values as specified in Table 5.3.3-1, DSCP Assignments.

17. **[Required: PMT]** The system probes shall be capable of operating in active and passive modes.

18. **[Required: PMT]** The product data server shall support a minimum of two 10/100-Mbps Ethernet NICs.

19. **[Required: PMT]** The product data server shall be capable of pulling probe data at user-defined intervals, or accepting data pushed by probes. The interval shall be configurable from 1 to 10 minutes.

20. **[Required: PMT]** The product database shall be designed to retain one year's worth of performance data based on a vendor-calculated typical implementation.

21. **[Required: PMT]** The product database shall be able to export the performance data.

22. **[Required: PMT]** If the product has a system performance measurement application, it shall be equipped with a minimum of a single Ethernet 10/100/1000-Mbps interface.

23. **[Required: PMT]** The product shall have a graphical user interface (GUI) that is capable of displaying media performance measurements for assigned probes on user-defined intervals. The default shall be a 5-minute interval.

24. **[Required: PMT]** The product shall have the ability to graphically display substandard media performance received from the probes.

25. **[Required: PMT]** The product shall be capable of exporting media performance measurements to higher level OSSs.

26. **[Required: PMT]** The product shall be capable of triggering Substandard Performance Fault Isolation (SPFI) activity when substandard performance is detected.

NOTE: The SPFI activity includes automated scripts that will isolate the cause of the substandard performance to one or more specific network segments as described in the following requirement.

27. **[Required: PMT]** The product shall be capable of isolating the cause(s) of substandard performance to a specific location or site.

THIS PAGE INTENTIONALLY LEFT BLANK